DCB 5A Inline DC Surge Arresters

Ideal for industrial or commercial applications. The DC Inline Protector Series (DCB) provides an economic means of preventing damage to sensitive electronic equipment, from the dangers of transients, which can occur as the result of a nearby lightning strike or surges derived from the switching of inductive or capacitive loads.

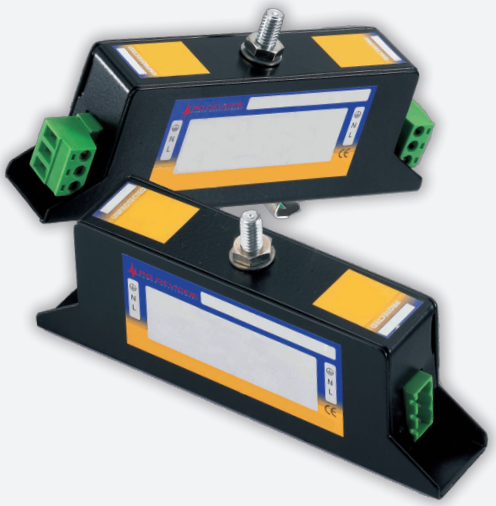

The DCB is best used as part of a totally integrated surge protection system and should be considered as an 'important link in the chain' when planning a systematic and co-ordinated approach to surge protection but it is still essential that main service and distribution panel, signal and telemetry protection is provided. The circuit to which the DCB is fitted must be fused at or below the "maximum load current" stated in the table below, using a type gG/gL fuse.

Specifications					
Part Code	**DCB/5/12**	**DCB/5/24**	**DCB/5/48**	**DCB/5/110**	**DCB/16/110**
Number of wires protected	2	2	2	2	2
Nominal Voltage (DC)	12	24	48	110	110
Maximum Operating Voltage (DC)	18	30	65	127	127
Reference Voltage @ 1mA	22	35	75	150	150
Let-Through Voltage @ 150A	30	60	135	200	200
Maximum surge current (8/20µs)	10kA	10kA	10kA	10kA	10kA
Maximum load current	5A	5A	5A	5A	16A
Response Time	<10ns	<10ns	<10ns	<10ns	<10ns
Connection	Screw Terminal	Screw Terminal	Screw Terminal	Screw Terminal	Screw Terminal
Mounting	DIN Rail	DIN Rail	DIN Rail	DIN Rail	DIN Rail
Operating Temperature	-40 to +70°C	-40 to +70°C	-40 to +70°C	-40 to +70°C	-40 to +70°C
Storage Temperature	-40 to +85°C	-40 to +85°C	-40 to +85°C	-40 to +85°C	-40 to +85°C

Dimensions

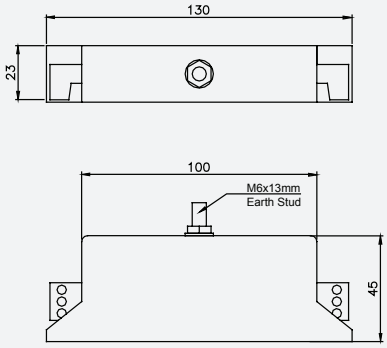

Application

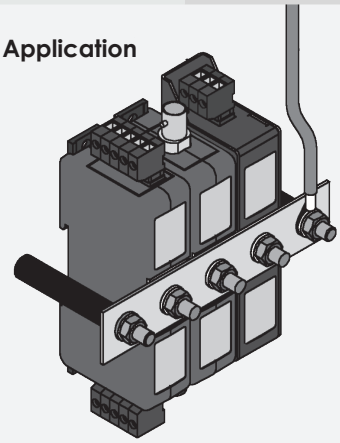

All of the above information, including drawings, illustrations and graphic designs, reflects our present understanding and is to the best of our knowledge and belief correct and reliable. Users, however, should independently evaluate the suitability of each product for the desired application. Under no circumstances does this constitute an assurance of any particular quality or performance. Such an assurance is only provided in the context of our product specifications or explicit contractual arrangements. Our liability for these products is set forth in our standard terms and conditions of sale.

PD Devices Ltd. Unit 1, Old Station Yard, South Brent, Devon. TQ10 9AL.
www.pddevices.co.uk +44 (0)1364 649248 info@pddevices.co.uk

Revision PD1, 24/08/11
Information subject to change without notice.